Reset

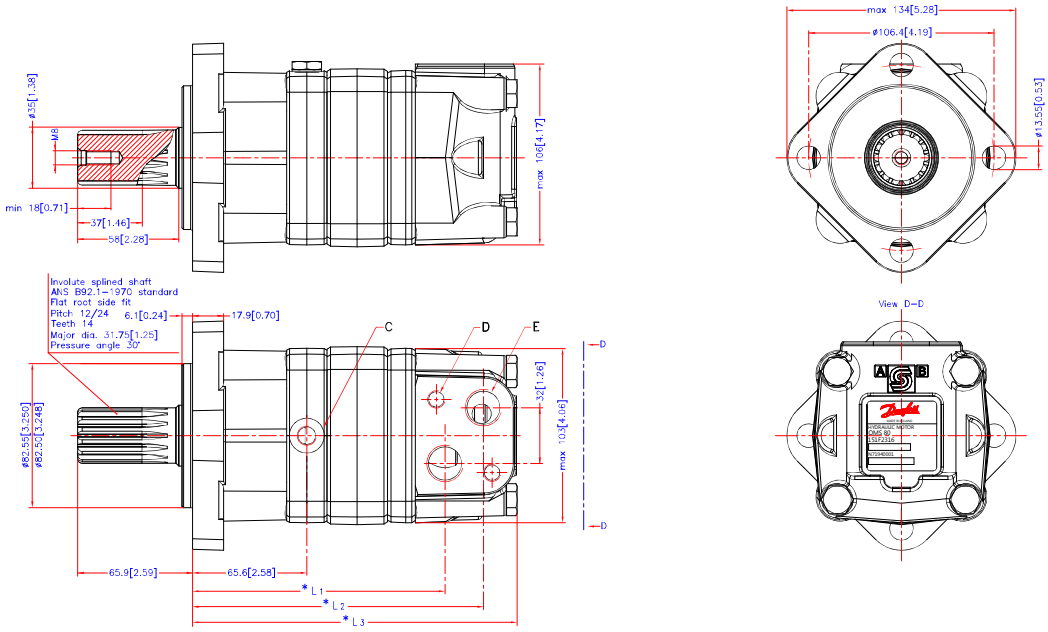


| Code Number | CCM | * L 1 mm./inch. | * L 2 mm./inch. | * L 3max mm./inch. |
|---|---|---|---|---|
| 151F0507 | 80 | 124.1[4.89] | 146.1[5.75] | max. 168.4[6.63] |
| 151F0508 | 100 | 127.5[5.02] | 149.5[5.89] | max. 171.8[6.76] |
| 151F0509 | 125 | 131.9[5.20] | 153.9[6.06] | max. 176.2[6.93] |
| 151F0510 | 160 | 137.9[5.43] | 159.9[6.30] | max. 182.2[7.17] |
| 151F0511 | 200 | 144.9[5.70] | 166.9[6.57] | max. 189.2[7.45] |
| 151F0631 | 200 | 144.9[5.70] | 166.9[6.57] | max. 189.2[7.45] |
| 151F0512 | 250 | 153.6[6.05] | 175.6[6.91] | max. 197.9[7.80] |
| 151F0513 | 315 | 164.9[6.49] | 186.9[7.36] | max. 209.2[8.24] |
| 151F0567 | 400 | 178.5[7.03] | 200.5[7.89] | max. 222.8[8.77] |

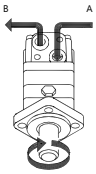


C: Drain connection
G 1/4; 12[0.47] deep

D: M10; 13[0.51] deep

E: G 1/2; 16[0.63] deep

Tolerance for basic dimensions = ±1 mm (0.04 inch)

| Altered | Reason | Date |
|---|---|---|
| - | - | - |

Scale 1:1
Projection
Date 2015.01.19
Design MP
Approb.

Confidential: Property of Danfoss (Nordborg) A/S, Denmark. Not to be handed over to, copied or used by third-party. Two- or three dimensional reproduction of contents to be authorized by Danfoss (Nordborg) A/S. Danfoss (Nordborg) A/S can accept no responsibility for possible errors on drawings. Danfoss (Nordborg) A/S reserves the right to alter products already on order or provided that such alterations can be made without subsequential changes being necessary in specifications already agreed.

OMS
14T splined

No. 8_151D0672